REV.	ECN.NO.	APPD.
A	/	pcy

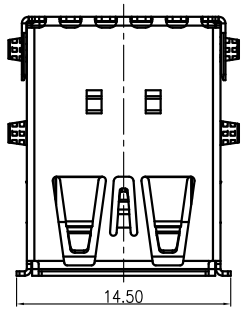

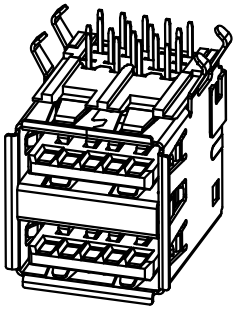

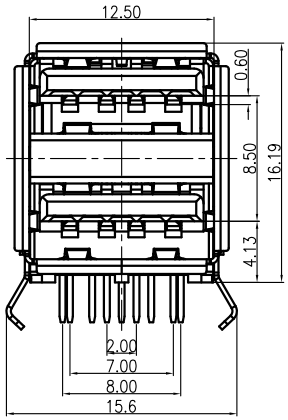

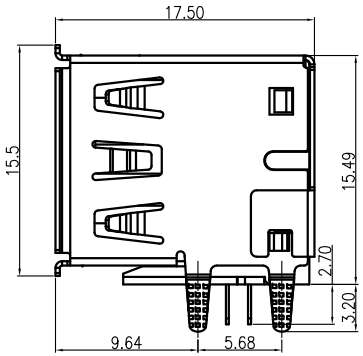

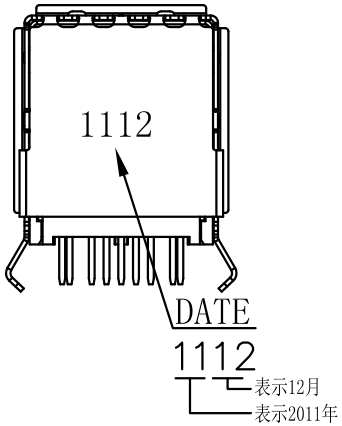

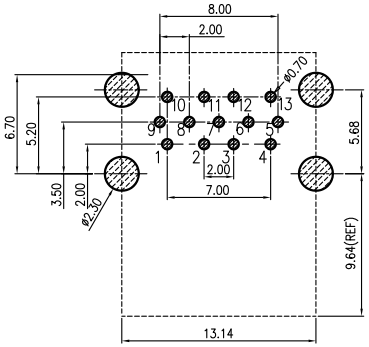

PCB LAYOUT REFERENCE

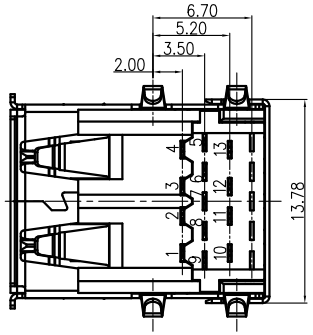

Remark:

1.MATERIAL:

1.1 Housing:thermoplastic plastics.

1.2 terminals:Copper Alloy

1.3 Front Shell:Copper Alloy/SPCC.
Middle Shell:SPCC

2.characteristics:

2.1 Rating Voltage : 30V AC.

2.2 Rating Current:PIN1&PIN4(Vbus&Correponding ground PIN) 1.8A MAX Other PINS 0.25A min.

2.3 Contact Resistance:PIN1&PIN4:30 mΩ MAX. Other PINS: 50 mΩ

2.4 Insulation Resistance:100 MΩ MIN.

2.5 Withstanding Voltage:AC 100V between adjacent contacts

2.6 Mating force: 3.57Kgf MAX(35N MAX)

2.7 Extraction force:1Kgf Min(9.8N Min)

2.8 Life test:1500Cycles MIN.

2.9 Temperature Range: -30℃~+80℃.

U321-2521-12801R

1:Iron alloy Ni plating

1:Au 1u"

2:PBT

8:Blue 300C-1

1:tray

Pin Number	Signal Name	Pin Number	Signal Name
1	VBUS	10	VBUS
2	D-	11	D-
3	D+	12	D+
4	GND	13	GND
5	StdA_SSRX-		
6	StdA_SSRX+		
7	GND_DRAIN		
8	StdA_SSTX-		
9	StdA_SSTX+		
Shell	Shield		

TOLERANCE UNLESS OTHERWISE SPECIFIED			
.XXX	±0.10	.X°	±3°
.XX	±0.20	.XX°	±2°
.X	±0.25		

深圳市华联威电子科技有限公司

HUA LIAN WEI TECHNOLOGY ELECTRONICS CO;LTD.

APPROVED		PART NAME:	USB 3.0 AF双层90度短体上2.0下3.0			
CHECKED		PART No:	U321-2521-12801R			C
DRAWED	pengchaoyong	PROJECTION:	UNIT:	SCALE	SHEET	REV.
DATE	2014.09.30		mm	1:1	1 OF 1	A