REV.	ECN.NO.	APPD.
A	EXXXXXXXXXX	yangguifeng

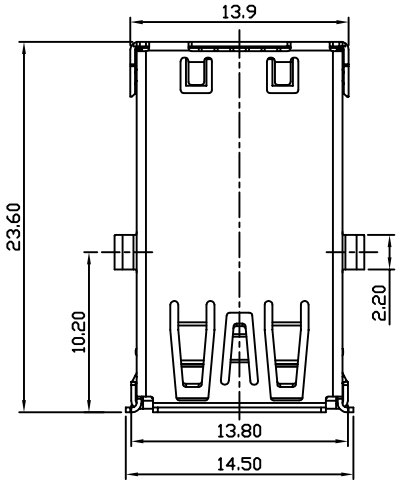

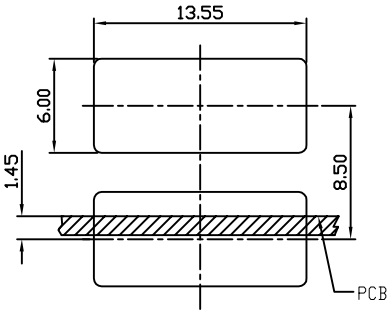

RECOMMEND PANEL CUTOUT

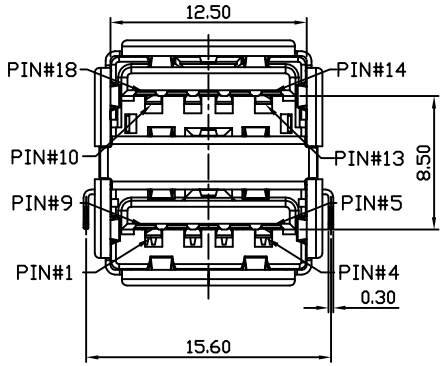

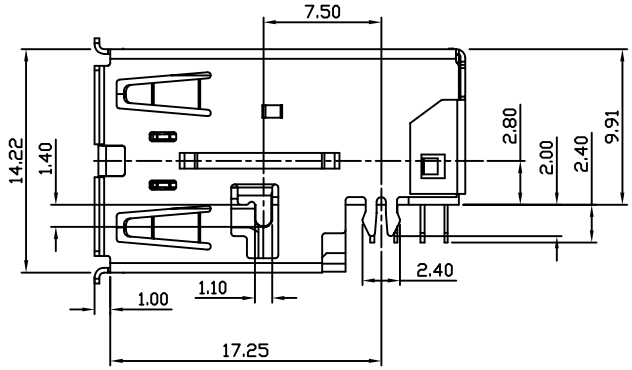

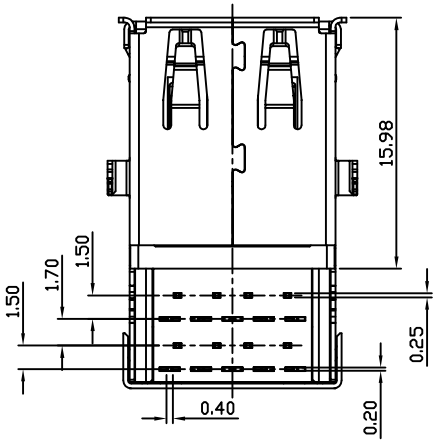

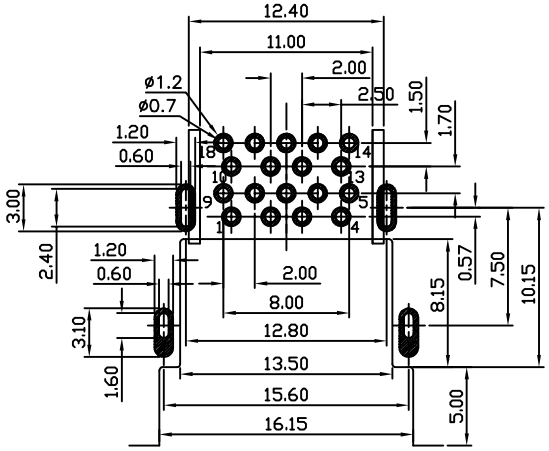

RECOMMENDED P.C.B LAYOUT
TOLERANCE: ±0.05(TOP VIEWS)

NOTES:

1. MATERIAL:
   - 1.1 HOUSING & COVER: HIGH TEMPERATURE THERMOPLASTIC , GLASS FIBER FILLED, UL94V-0, COLOR : BLUE.
   - 1.2 CONTACTS 5PIN: BRASS,
   - 1.3 CONTACTS 4PIN: PHOSPHOR BRONZE,
   - 1.4 SHELL: SUS201.
   - 1.5 ISOLATED: SK7.
2. FINISH:
   - 2.1 CONTACTS: 30u" MIN GOLD PLATED ON CONTACT AREA, 100u" MIN. MATTE-TIN PLATED ON SOLDER TAIL, 50u" MIN. NICKEL UNDERPLATED OVERALL.
   - 2.2 SHELL: [50u" MIN. NICKEL PLATED OVERALL.
   - 2.3 ISOLATED: 50u" MIN. NICKEL PLATED OVERALL.
3. REFLOW SOLDER CAPABLE TO 260°C

U321-571X-XXX1X8

- 1:铁壳镀镍
- 5:铜壳镀镍
- B:不锈钢镀镍

- 1:半金1u"
- 3:半金3u"
- 5:半金5u"
- G:半金G/Fu"
- A:半金30u"
- 4:镀全亮锡

- 1:PA66
- 2:PBT
- 0:PA4T

- 1:吸塑盒
- 2:吸塑管
- 3:载带
- 6:载带+贴麦拉

- 1:黑色
- 2:白色
- 3:米黄色
- 7:蓝色

TOLERANCE UNLESS OTHERWISE SPECIFIED		HLW 深圳市华联威电子科技有限公司 HUA LIAN WEI TECHNOLOGY ELECTRONICS CO;LTD.				
.XXX ±0.10 .XX ±0.20 .X ±0.30	.X° ±3° .XX° ±2°					
APPROVED		PART NAME:	USB 双层3.0 沉板式			
CHECKED		PART No:	U321-571B-A07118			C
DRAWED	yangguifeng	PROJECTION:	UNIT:	SCALE	SHEET	REV.
DATE	2021.12.01		mm	1:1	1 OF 1	A