REV.	ECN.NO.	APPD.
A	/	pcy

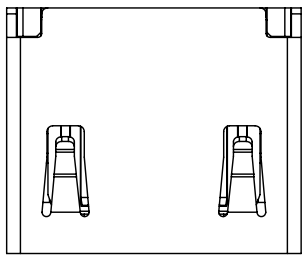

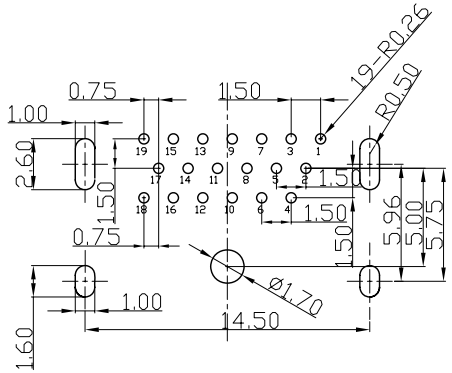

RECOMMENDED PCB LAYOUT (TOP VIEW)
TOLERANCE FOR PCB LAYOUT IS ±0.05

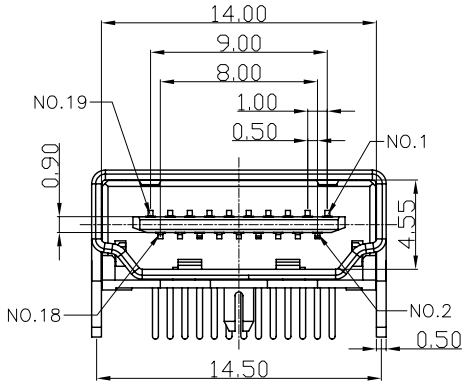

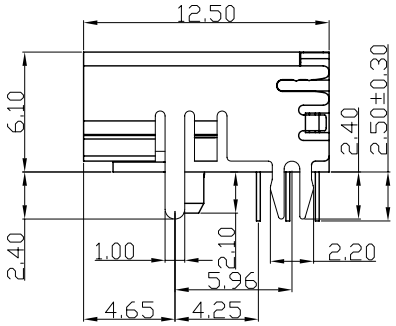

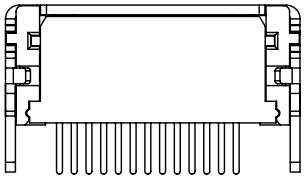

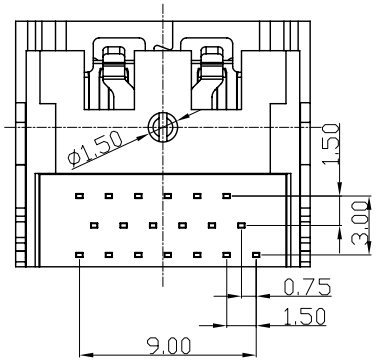

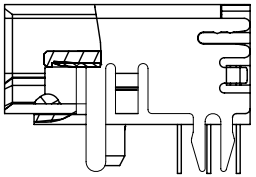

NOTES:

1. MATERIAL:
   1.1 Housing: thermoplastic plastics
   1.2 terminals: Copper Alloy
   Gold plated in contact area:
   Tin plated in termination
   Nickel Plated overall
   1.3 Shell: Steel&Copper Alloy
   Nickel/Au Plated overall
2. ELECTRICAL CHARACTERISTICS:
   2.1 Rating Current : 0.5 Ampere
   2.2 Rating Voltage : 40 V Max
   2.3 Contact Resistance: 30 Milli ohms
   2.4 Insulation Resistance: 100 Mega ohms Min.
3. MECHANICAL CHARACTERISTICS:
   3.1 Connector Mating force: 4.5kg MAX
   3.2 Connector Unmating force: 1.0Kg min
   3.3 Durability: 10000Cycles.
4. ENVIRONMENT CHARACTERISTICS:
   4.1 Operating temperature: -20℃ to +85℃
   4.2 Storage temperature: -20℃ to +65℃

HD23-023X-XXX0X1

- X: 1:Iron alloy Ni plating; 5:Copper alloy Ni plating; 4:Iron alloy Au plating; 8:Copper alloy Au plating
- X: 1:Au 1u", 3:Au 3u"; 5:Au 5u", 7:Au 10u'; 8:Au 15u", A:Au 30u"
- X: 5:PA9T; 2:PBT; 6:LCP
- X: 1:Black
- X: 1:tray; 2:Tube; 8:Tape&Reel; 9:Tape&Reel+Mylar

TOLERANCE UNLESS OTHERWISE SPECIFIED		HLW 深圳市华联威电子科技有限公司 HUA LIAN WEI TECHNOLOGY ELECTRONICS CO; LTD.				
.XXX ±0.10 .XX ±0.20 .X ±0.30	.X° ±3° .XX° ±2°					
APPROVED		PART NAME:	HDMI 19P/F 三排90度鱼叉脚(无耳)			
CHECKED		PART No:	HD23-023X-XXX0X1			C
DRAWED	pengchaoyong	PROJECTION:	UNIT:	SCALE	SHEET	REV.
DATE	2014.12.3		mm	1:1	1 OF 1	A