REV.	ECN.NO.	APPD.
A	EXXXXXXXXXX	yangguifeng

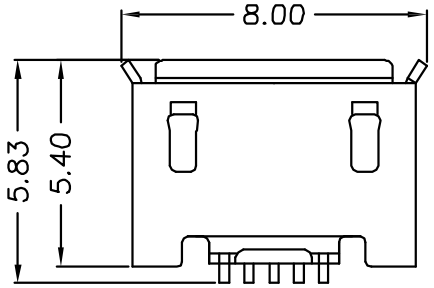

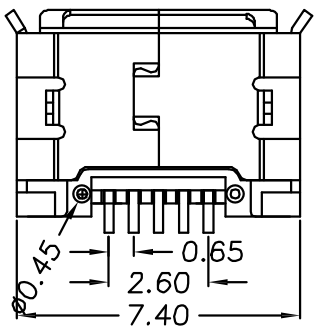

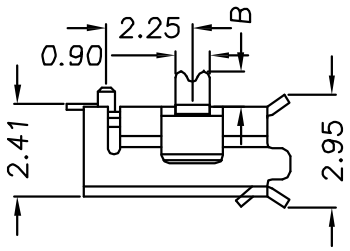

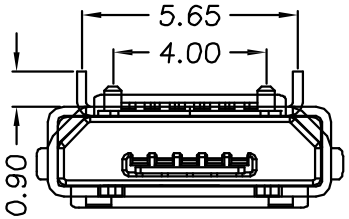

NOTES:
1.MATERIAL:
1.1 Housing: thermoplastic plastics,
1.2 terminals:Copper Alloy
Gold plated overall
1.3 Shell:Steel&Copper Alloy
Nickel/Tin Plated overall
2.ELECTRICAL CHARACTERISTICS:
2.1 Rating Current :1.5 Ampere
2.2 Rating Voltage :30 V Max
2.3 Contact Resistance:50 Milli ohms
2.4 Insulation Resistance:100 Mega ohms Min.
3.MECHANICAL CHARACTERISTICS:
3.1 Connector Mating force: 35N MAX
3.2 Connector Unmating force:7N min
4.ENVIRONMENT CHARACTERISTICS:
4.1 Operating temperature:-0℃ to +50℃
4.2 Storage temperature:-20℃ to +60℃

U442-B71A-G61038

A:不锈钢镀雾锡
G:半金G/Fu"
6:LCP
1:黑色
3:载带

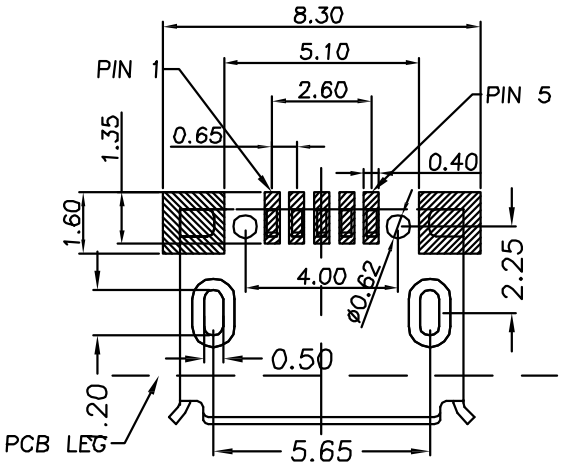

RECOMMENDED P.C.B. LAYOUT
TOP VIEW (TOLRANCE: ±0.05)

B	T=0.90
B	T=1.35
B	T=1.65

TOLERANCE UNLESS OTHERWISE SPECIFIED .XXX ±0.10 .XX ±0.20 .X ±0.30 .X° ±3° .XX° ±2°		HLW 深圳市华联威电子科技有限公司 HUA LIAN WEI TECHNOLOGY ELECTRONICS CO;LTD.				
APPROVED		PART NAME:	MICRO 5P 短体5.0 有柱			
CHECKED		PART No:	U442-B71A-G61038			C
DRAWED	yangguifeng	PROJECTION:	UNIT:	SCALE	SHEET	REV.
DATE	2021.12.01		mm	1:1	1 OF 1	A