REV.	ECN.NO.	APPD.
A	EXXXXXXXXXX	chenyiting

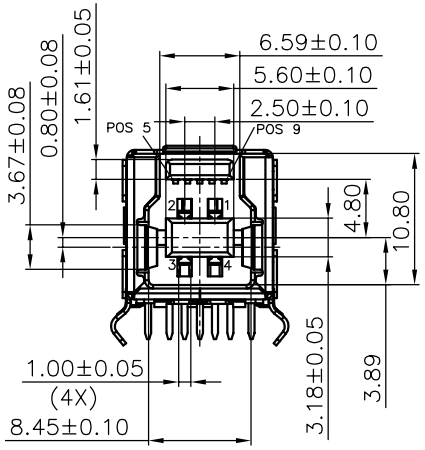

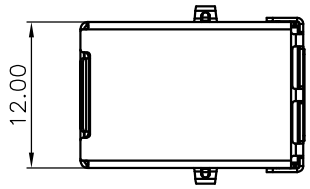

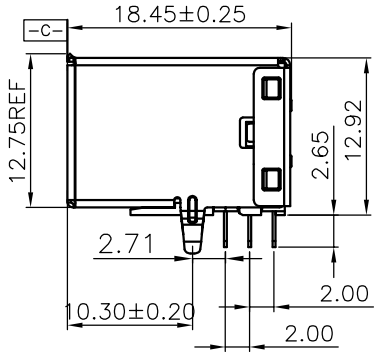

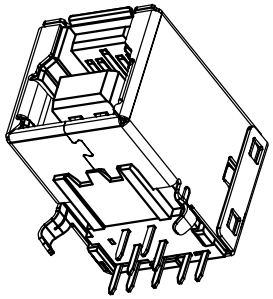

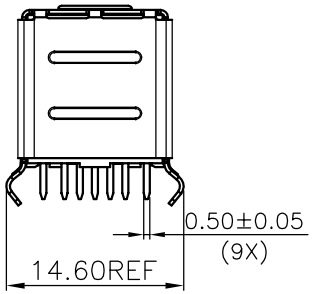

Remark:
1.MATERIAL:
1.1 Housing:thermoplastic plastics.
1.2 terminals:Copper Alloy
1.3 Front Shell:Copper Alloy/C2680.
Middle Shell:C2680
2.characteristics:
2.1 Rating Voltage : 30V AC.
2.2 Rating Current:PIN1&PIN4(Vbus&Correponding ground PIN)
1.8A MAX Other PINS 0.25A min.
2.3 Contact Resistance:PIN1&PIN4:30 mΩ MAX. Other PINS: 50 mΩ
2.4 Insulation Resistance:100 MΩ MIN.
2.5 Withstanding Voltage:AC 100V between adjacent contacts
2.6 Mating force: 3.57Kgf MAX(35N MAX)
2.7 Extraction force:1Kgf Min(9.8N Min)
2.8 Life test:1500Cycles MIN.
2.9 Temperature Range: -30℃~+80℃.

U341-0225-G27018
1:吸塑盒
5:铜壳镀镍
7:蓝色
G:半金G/Fu"
2:PBT

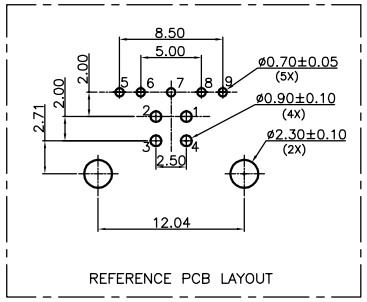

REFERENCE PCB LAYOUT

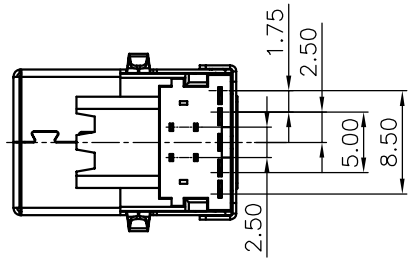

TOLERANCE UNLESS OTHERWISE SPECIFIED		HLW 深圳市华联威电子科技有限公司 HUA LIAN WEI TECHNOLOGY ELECTRONICS CO;LTD.				
.XXX ±0.10 .XX ±0.20 .X ±0.30	.X° ±3° .XX° ±2°					
APPROVED		PART NAME:	USB 3.0 BF 90度			
CHECKED		PART No:	U341-0225-G27018			C
DRAWED	chenyiting	PROJECTION:	UNIT:	SCALE	SHEET	REV.
DATE	2023.04.25		mm	1:1	1OF1	A